48' T200 TITAN TOWER

(P/N 4.95.0205.000)

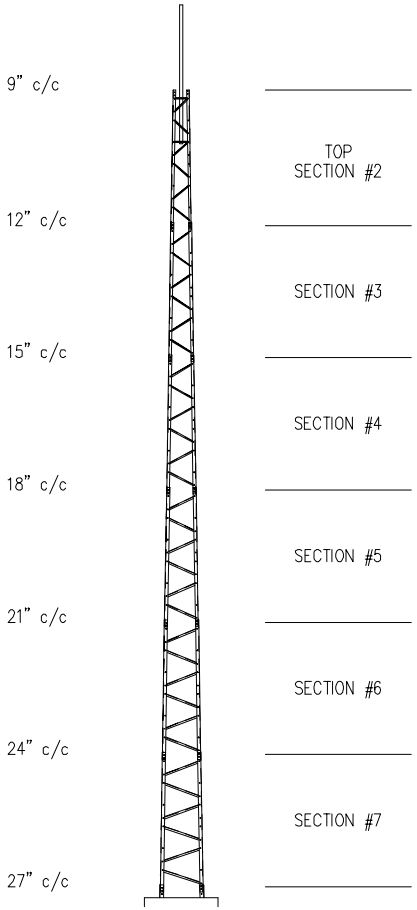

MAXIMUM ALLOWABLE ANTENNA AREA		
SURVIVAL DESIGN NO ICE (ROUND/FLAT)		
70mph WIND	85mph WIND	100mph WIND
16/10 (sqft)	6/4 (sqft)	--/--

SECTION SPLICE

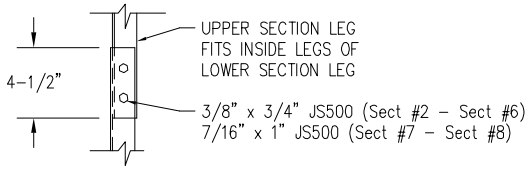

TOP ELEVATION

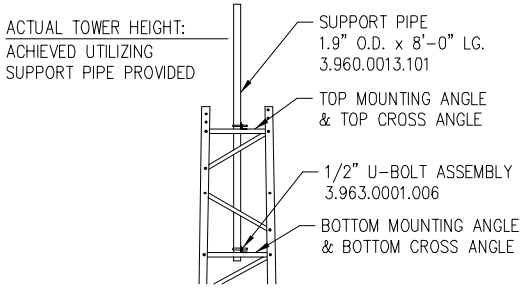

FOUNDATION DESIGN (NORMAL DRY SOIL)

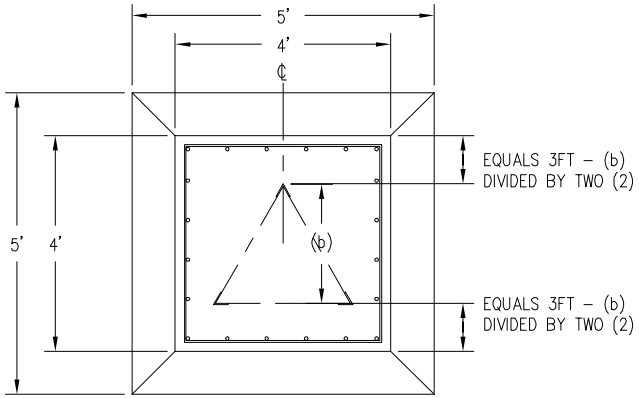

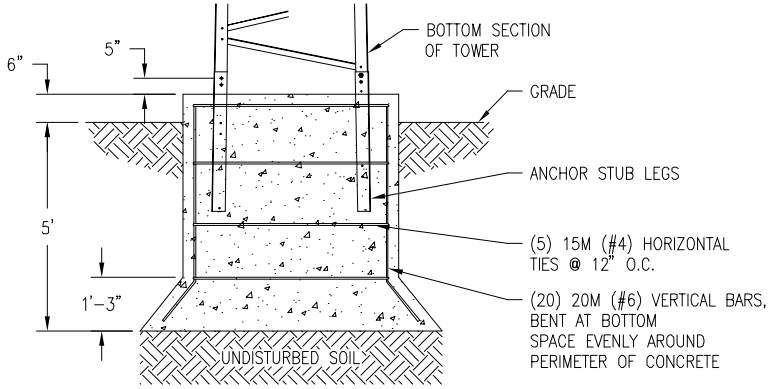

FOUNDATION LOADS:
MAX. OVERTURNING MOMENT (K*FT) = 28.00
MAX. SHEAR (kips) = 1.0
DESIGN UPLIFT PER INDIVIDUAL LEG (kips) = 14.0

CONCRETE VOLUME:
4.0 CUBIC YARDS

NOTES:
1) PRE-ASSEMBLED PART NUMBER 4.95.0205.000.
2) MAX. ANTENNA LOADS ARE CENTRALLY LOCATED AND BALANCED, 3FT OR LESS ABOVE THE TOWER TOP.
3) "SURVIVAL" DESIGN IN NOT THE SAME AS EIA-222. FOR EIA COMPLIANCE SEE OUR SUPERTITAN MODELS.
4) MINIMUM 32ksi YIELD FOR ALL COMPONENTS.
5) CONSTRUCTED FROM PASSIVATED G-90 COAT GALVANIZED STEEL SHEET.
6) TOWERS COME ASSEMBLED IN 8FT SECTIONS.
7) TOP SUPPORT PIPE IS INCLUDED.
8) FOR OPTIONAL ROCK BOLT FOUNDATION SEE DWG 000001.610.0033 AND 000001.610.0021.

REV.	REV. BY:	CHK. BY:	DESCRIPTION	DATE
A	MRH	CR	ISSUED FOR DISTRIBUTION	5 APR 07

CONFIDENTIAL: ALL INTELLECTUAL PROPERTY RIGHTS HEREIN ARE THE PROPERTY OF TRYLON MANUFACTURING COMPANY LTD. ALL DUPLICATION, RECORDING, DISCLOSURE OR USE IS PROHIBITED WITHOUT WRITTEN CONSENT OF TRYLON MANUFACTURING COMPANY LTD.

TRYLON TSF

CUSTOMER:	SITE:	SCALE: 85.000	
DATE: 07 MAR 07	BY: MRH	CHK: CR	APP: JB
TITLE: 48' T200 TITAN TOWER		DRAWING NO. 000001.610.0079	

\\ENG-SERVER\engineering\VAULT-D-DRAWINGS\000001.610\000079-1.dwg, 5/1/2007 4:29:27 PM, MARCUSH

48' T300 TITAN TOWER

(P/N 4.95.0305.000)

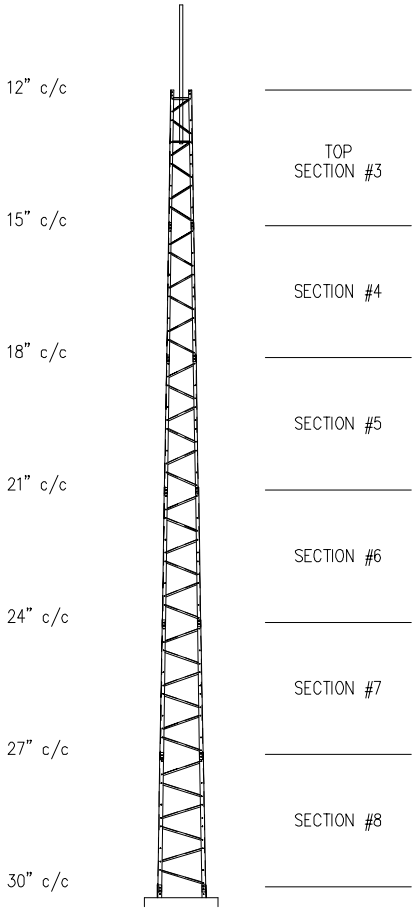

MAXIMUM ALLOWABLE ANTENNA AREA		
SURVIVAL DESIGN NO ICE (ROUND/FLAT)		
70mph WIND	85mph WIND	100mph WIND
25/17 (sqft)	11/8 (sqft)	1/1 (sqft)

SECTION SPLICE

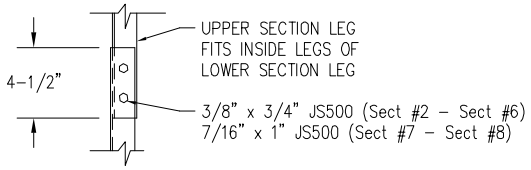

TOP ELEVATION

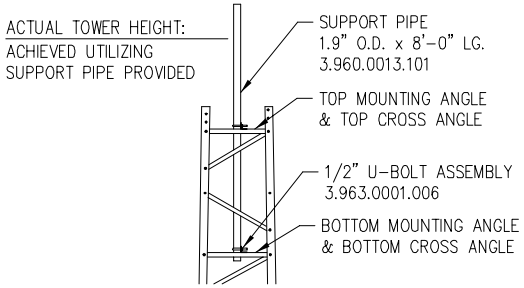

FOUNDATION DESIGN (NORMAL DRY SOIL)

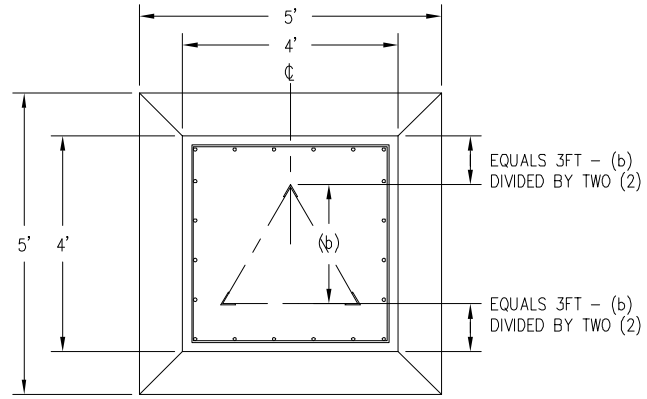

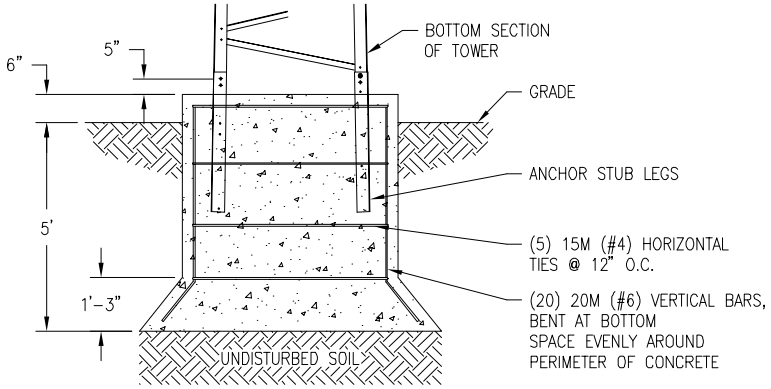

FOUNDATION LOADS:
MAX. OVERTURNING MOMENT (K*FT) = 28.00
MAX. SHEAR (kips) = 1.0
DESIGN UPLIFT PER INDIVIDUAL LEG (kips) = 14.0

CONCRETE VOLUME:
4.0 CUBIC YARDS

NOTES:
1) PRE-ASSEMBLED PART NUMBER 4.95.0305.000.
2) MAX. ANTENNA LOADS ARE CENTRALLY LOCATED AND BALANCED, 3FT OR LESS ABOVE THE TOWER TOP.
3) "SURVIVAL" DESIGN IN NOT THE SAME AS EIA-222. FOR EIA COMPLIANCE SEE OUR SUPERTITAN MODELS.
4) MINIMUM 32ksi YIELD FOR ALL COMPONENTS.
5) CONSTRUCTED FROM PASSIVATED G-90 COAT GALVANIZED STEEL SHEET.
6) TOWERS COME ASSEMBLED IN 8FT SECTIONS.
7) TOP SUPPORT PIPE IS INCLUDED.
8) FOR OPTIONAL ROCK BOLT FOUNDATION SEE DWG 000001.610.0033 AND 000001.610.0021.

REV.	REV. BY:	CHK. BY:	DESCRIPTION	DATE
A	MRH	CR	ISSUED FOR DISTRIBUTION	5 APR 07

CONFIDENTIAL: ALL INTELLECTUAL PROPERTY RIGHTS HEREIN ARE THE PROPERTY OF TRYLON MANUFACTURING COMPANY LTD. ALL DUPLICATION, RECORDING, DISCLOSURE OR USE IS PROHIBITED WITHOUT WRITTEN CONSENT OF TRYLON MANUFACTURING COMPANY LTD.

TRYLON TSF

CUSTOMER:	SITE:	SCALE: 85.000	
DATE: 07 MAR 07	BY: MRH	CHK: CR	APP: JB
TITLE: 48' T300 TITAN TOWER		DRAWING NO. 000001.610.0080	

\\ENG-SERVER\amerida\VAULT_D-DRAWINGS\000001.610\000080-1.DWG, 5/1/2007 4:30:03 PM, MARCUSH

48' T500 TITAN TOWER

(P/N 4.95.0505.000)

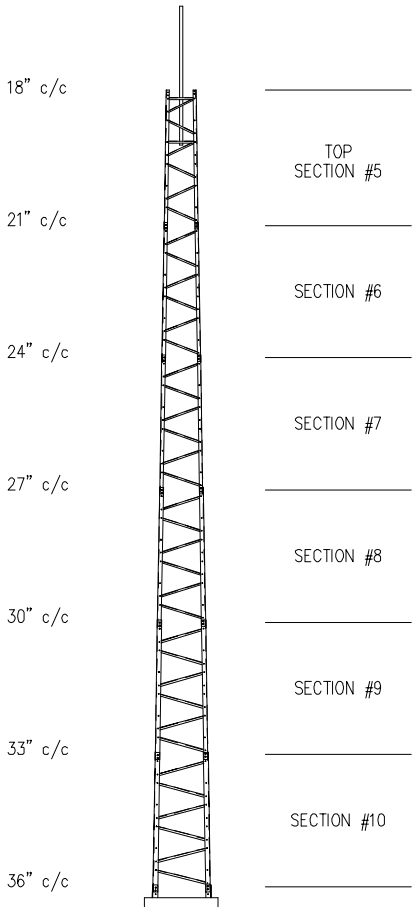

MAXIMUM ALLOWABLE ANTENNA AREA		
SURVIVAL DESIGN NO ICE (ROUND/FLAT)		
70mph WIND	85mph WIND	100mph WIND
50/34 (sqft)	27/18 (sqft)	12/8 (sqft)

SECTION SPLICE

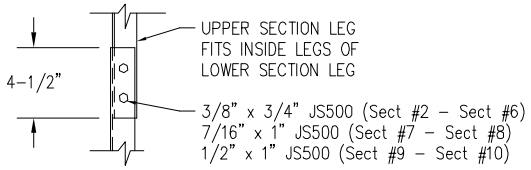

TOP ELEVATION

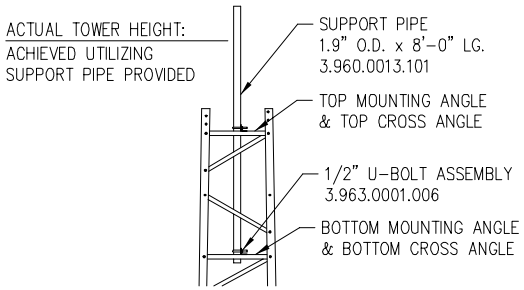

FOUNDATION DESIGN (NORMAL DRY SOIL)

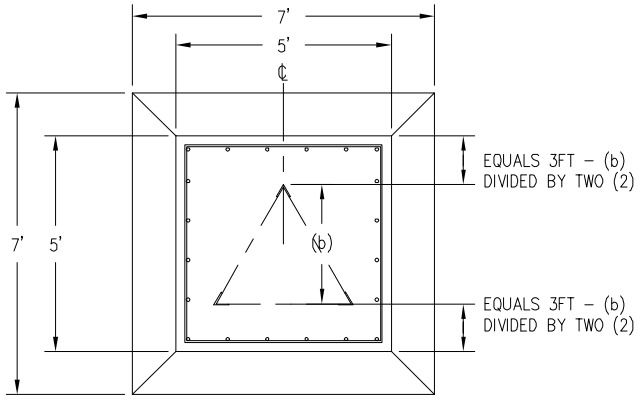

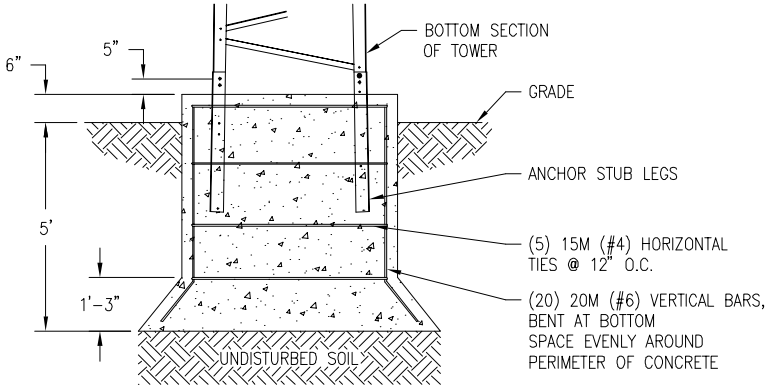

FOUNDATION LOADS:
MAX. OVERTURNING MOMENT (K*FT) = 67.00
MAX. SHEAR (kips) = 1.7
DESIGN UPLIFT PER INDIVIDUAL LEG (kips) = 23.0

CONCRETE VOLUME:
6.0 CUBIC YARDS

NOTES:
1) PRE-ASSEMBLED PART NUMBER 4.95.0505.000.
2) MAX. ANTENNA LOADS ARE CENTRALLY LOCATED AND BALANCED, 3FT OR LESS ABOVE THE TOWER TOP.
3) "SURVIVAL" DESIGN IN NOT THE SAME AS EIA-222. FOR EIA COMPLIANCE SEE OUR SUPERTITAN MODELS.
4) MINIMUM 32ksi YIELD FOR ALL COMPONENTS.
5) CONSTRUCTED FROM PASSIVATED G-90 COAT GALVANIZED STEEL SHEET.
6) TOWERS COME ASSEMBLED IN 8FT SECTIONS.
7) TOP SUPPORT PIPE IS INCLUDED.
8) FOR OPTIONAL ROCK BOLT FOUNDATION SEE DWG 000001.610.0033 AND 000001.610.0021.

REV.	REV. BY:	CHK. BY:	DESCRIPTION	DATE
A	MRH	CR	ISSUED FOR DISTRIBUTION	5 APR 07

CONFIDENTIAL: ALL INTELLECTUAL PROPERTY RIGHTS HEREIN ARE THE PROPERTY OF TRYLON MANUFACTURING COMPANY LTD. ALL DUPLICATION, RECORDING, DISCLOSURE OR USE IS PROHIBITED WITHOUT WRITTEN CONSENT OF TRYLON MANUFACTURING COMPANY LTD.

TRYLON TSF

CUSTOMER:	SITE:	SCALE: 85.000	
DATE: 07 MAR 07	BY: MRH	CHK: CR	APP: JB
TITLE: 48' T500 TITAN TOWER		DRAWING NO. 000001.610.0082	

\\ENG-SERVER\engineering\VAULT_D-DRAWINGS\000001.610\000082-1.dwg, 5/1/2007 4:31:39 PM, MARCUSH

48' T500 TITAN TOWER

(P/N 4.95.0505.000)

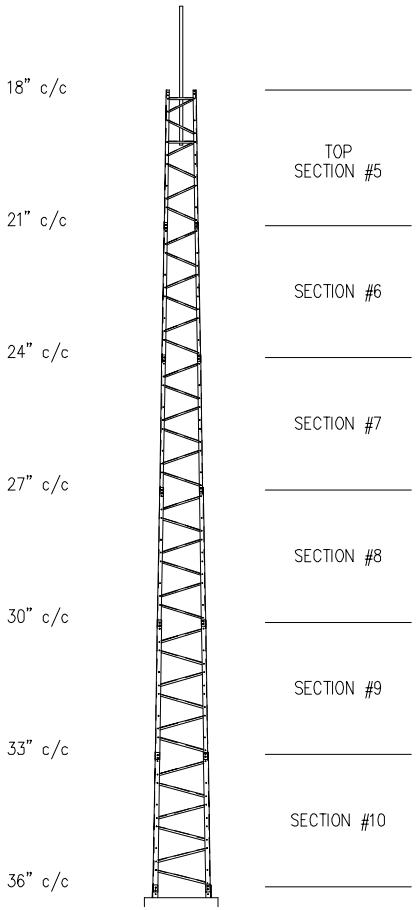

MAXIMUM ALLOWABLE ANTENNA AREA		
SURVIVAL DESIGN NO ICE (ROUND/FLAT)		
70mph WIND	85mph WIND	100mph WIND
50/34 (sqft)	27/18 (sqft)	12/8 (sqft)

SECTION SPLICE

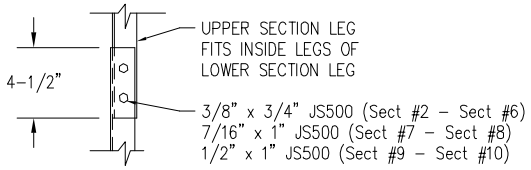

TOP ELEVATION

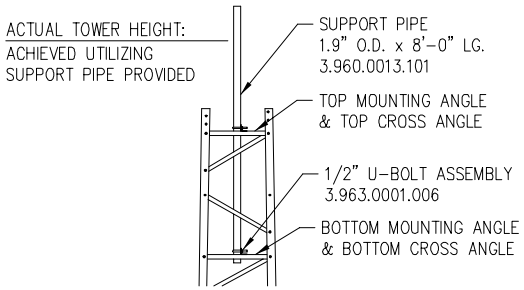

FOUNDATION DESIGN (NORMAL DRY SOIL)

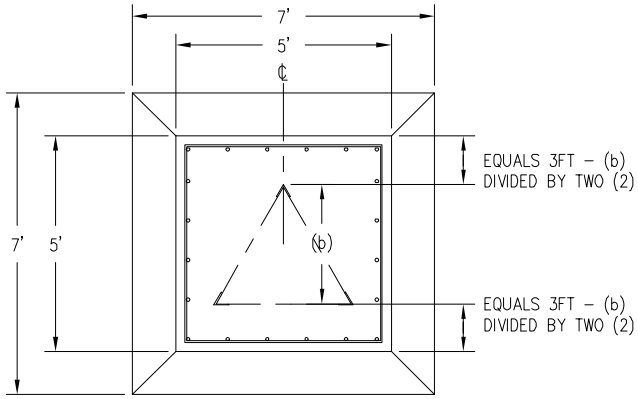

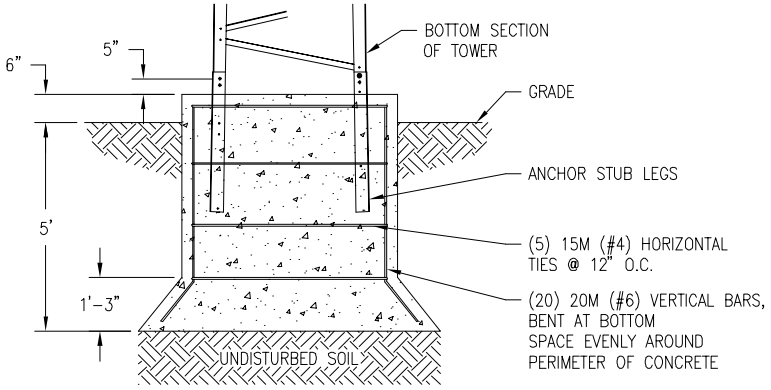

FOUNDATION LOADS:
MAX. OVERTURNING MOMENT (K*FT) = 67.00
MAX. SHEAR (kips) = 1.7
DESIGN UPLIFT PER INDIVIDUAL LEG (kips) = 23.0

CONCRETE VOLUME:
6.0 CUBIC YARDS

NOTES:
1) PRE-ASSEMBLED PART NUMBER 4.95.0505.000.
2) MAX. ANTENNA LOADS ARE CENTRALLY LOCATED AND BALANCED, 3FT OR LESS ABOVE THE TOWER TOP.
3) "SURVIVAL" DESIGN IN NOT THE SAME AS EIA-222. FOR EIA COMPLIANCE SEE OUR SUPERTITAN MODELS.
4) MINIMUM 32ksi YIELD FOR ALL COMPONENTS.
5) CONSTRUCTED FROM PASSIVATED G-90 COAT GALVANIZED STEEL SHEET.
6) TOWERS COME ASSEMBLED IN 8FT SECTIONS.
7) TOP SUPPORT PIPE IS INCLUDED.
8) FOR OPTIONAL ROCK BOLT FOUNDATION SEE DWG 000001.610.0033 AND 000001.610.0021.

REV.	REV. BY:	CHK. BY:	DESCRIPTION	DATE
A	MRH	CR	ISSUED FOR DISTRIBUTION	5 APR 07

CONFIDENTIAL: ALL INTELLECTUAL PROPERTY RIGHTS HEREIN ARE THE PROPERTY OF TRYLON MANUFACTURING COMPANY LTD. ALL DUPLICATION, RECORDING, DISCLOSURE OR USE IS PROHIBITED WITHOUT WRITTEN CONSENT OF TRYLON MANUFACTURING COMPANY LTD.

TRYLON TSF

CUSTOMER:	SITE:	SCALE: 85.000	
DATE: 07 MAR 07	BY: MRH	CHK: CR	APP: JB
TITLE: 48' T500 TITAN TOWER		DRAWING NO. 000001.610.0082	

\\ENG-SERVER\engineering\VAULT_D-DRAWINGS\000001.610\000082-1.dwg, 5/1/2007 4:31:39 PM, MARCUSH

48' T600 TITAN TOWER

(P/N 4.95.0605.000)

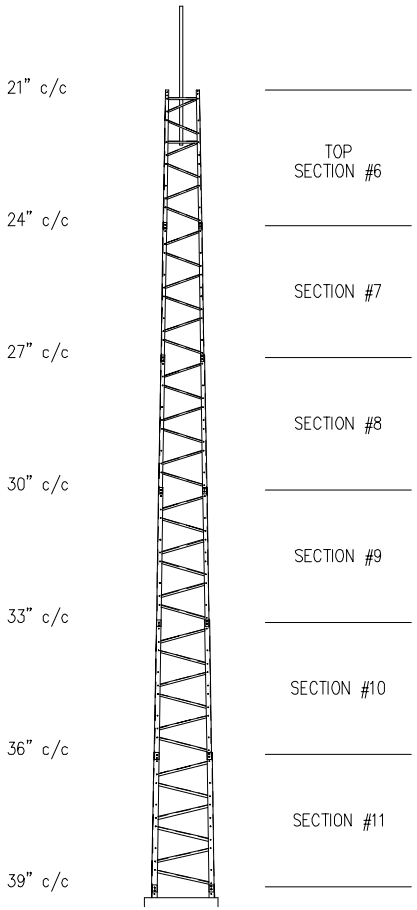

MAXIMUM ALLOWABLE ANTENNA AREA		
SURVIVAL DESIGN NO ICE (ROUND/FLAT)		
70mph WIND	85mph WIND	100mph WIND
67/45 (sqft)	40/27 (sqft)	23/15 (sqft)

SECTION SPLICE

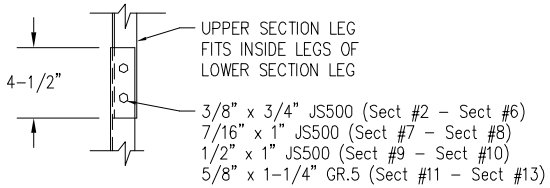

TOP ELEVATION

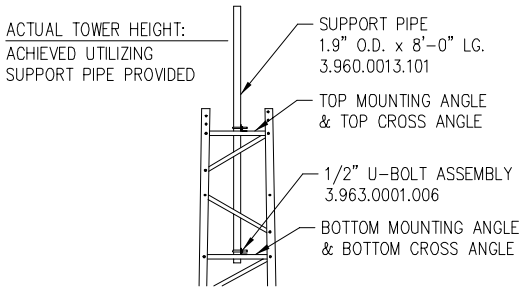

FOUNDATION DESIGN (NORMAL DRY SOIL)

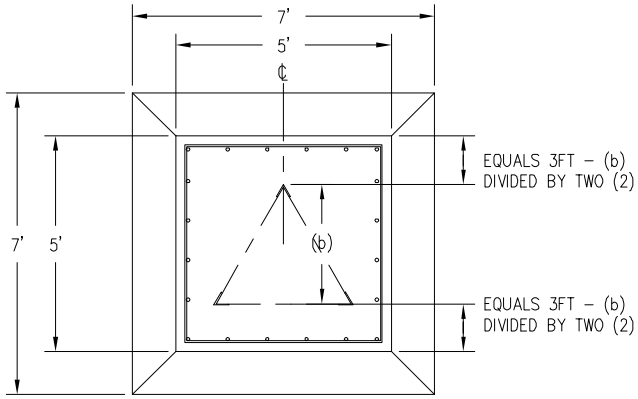

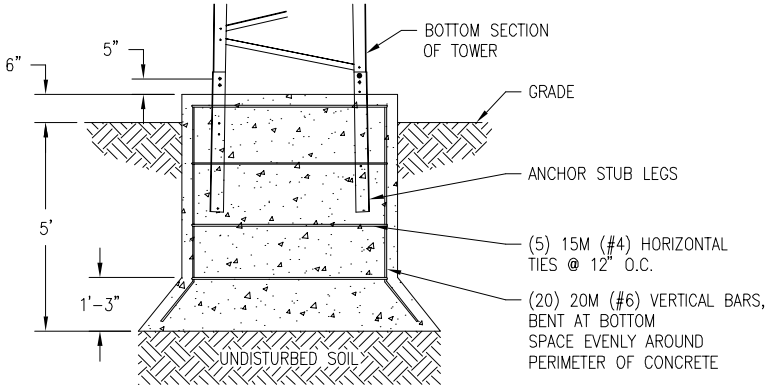

FOUNDATION LOADS:
MAX. OVERTURNING MOMENT (K*FT) = 67.00
MAX. SHEAR (kips) = 1.7
DESIGN UPLIFT PER INDIVIDUAL LEG (kips) = 23.0

CONCRETE VOLUME:
6.0 CUBIC YARDS

NOTES:
1) PRE-ASSEMBLED PART NUMBER 4.95.0605.000.
2) MAX. ANTENNA LOADS ARE CENTRALLY LOCATED AND BALANCED, 3FT OR LESS ABOVE THE TOWER TOP.
3) "SURVIVAL" DESIGN IN NOT THE SAME AS EIA-222. FOR EIA COMPLIANCE SEE OUR SUPERTITAN MODELS.
4) MINIMUM 32ksi YIELD FOR ALL COMPONENTS.
5) CONSTRUCTED FROM PASSIVATED G-90 COAT GALVANIZED STEEL SHEET.
6) TOWERS COME ASSEMBLED IN 8FT SECTIONS.
7) TOP SUPPORT PIPE IS INCLUDED.
8) FOR OPTIONAL ROCK BOLT FOUNDATION SEE DWG 000001.610.0033 AND 000001.610.0021.

REV.	REV. BY:	CHK. BY:	DESCRIPTION	DATE
A	MRH	CR	ISSUED FOR DISTRIBUTION	5 APR 07

CONFIDENTIAL: ALL INTELLECTUAL PROPERTY RIGHTS HEREIN ARE THE PROPERTY OF TRYLON MANUFACTURING COMPANY LTD. ALL DUPLICATION, RECORDING, DISCLOSURE OR USE IS PROHIBITED WITHOUT WRITTEN CONSENT OF TRYLON MANUFACTURING COMPANY LTD.

TRYLON TSF

CUSTOMER:	SITE:	SCALE: 85.000	
DATE: 07 MAR 07	BY: MRH	CHK: CR	APP: JB
TITLE: 48' T600 TITAN TOWER		DRAWING NO. 000001.610.0083	

\\ENG-SERVER\ampmedia\VAULT_D-DRAWINGS\000001.610\000083-1.dwg, 5/1/2007 4:32:13 PM, MARCUSH

48' T700 TITAN TOWER

(P/N 4.95.0705.000)

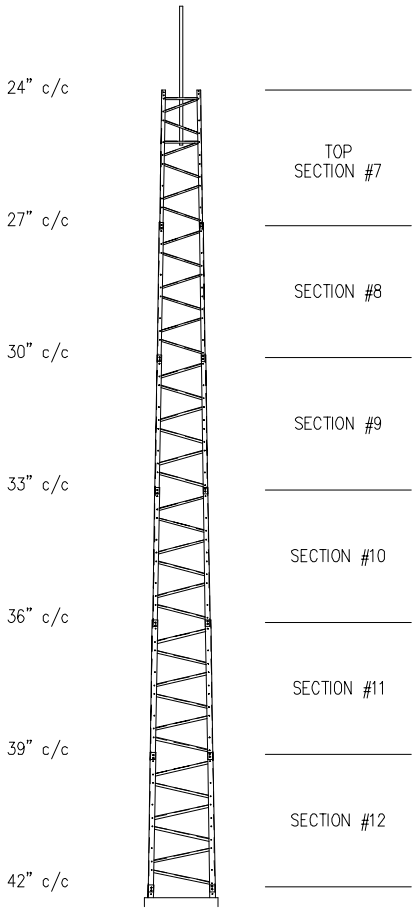

MAXIMUM ALLOWABLE ANTENNA AREA		
SURVIVAL DESIGN NO ICE (ROUND/FLAT)		
70mph WIND	85mph WIND	100mph WIND
95/64 (sqft)	59/39 (sqft)	32/21 (sqft)

SECTION SPLICE

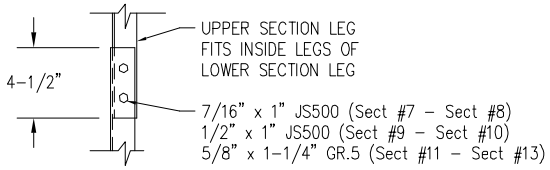

TOP ELEVATION

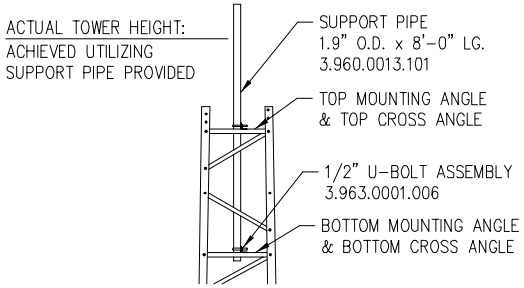

FOUNDATION DESIGN (NORMAL DRY SOIL)

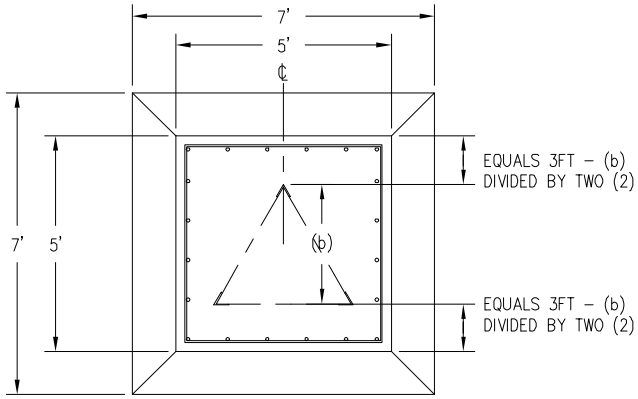

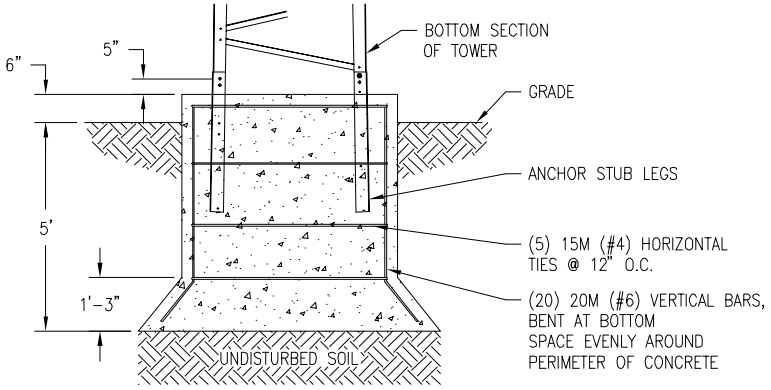

FOUNDATION LOADS:
MAX. OVERTURNING MOMENT (K*FT) = 67.00
MAX. SHEAR (kips) = 1.7
DESIGN UPLIFT PER INDIVIDUAL LEG (kips) = 23.0

CONCRETE VOLUME:
6.0 CUBIC YARDS

NOTES:
1) PRE-ASSEMBLED PART NUMBER 4.95.0705.000.
2) MAX. ANTENNA LOADS ARE CENTRALLY LOCATED AND BALANCED, 3FT OR LESS ABOVE THE TOWER TOP.
3) "SURVIVAL" DESIGN IN NOT THE SAME AS EIA-222. FOR EIA COMPLIANCE SEE OUR SUPERTITAN MODELS.
4) MINIMUM 32ksi YIELD FOR ALL COMPONENTS.
5) CONSTRUCTED FROM PASSIVATED G-90 COAT GALVANIZED STEEL SHEET.
6) TOWERS COME ASSEMBLED IN 8FT SECTIONS.
7) TOP SUPPORT PIPE IS INCLUDED.
8) FOR OPTIONAL ROCK BOLT FOUNDATION SEE DWG 000001.610.0033 AND 000001.610.0021.

REV.	REV. BY:	CHK. BY:	DESCRIPTION	DATE
A	MRH	CR	ISSUED FOR DISTRIBUTION	5 APR 07

CONFIDENTIAL: ALL INTELLECTUAL PROPERTY RIGHTS HEREIN ARE THE PROPERTY OF TRYLON MANUFACTURING COMPANY LTD. ALL DUPLICATION, RECORDING, DISCLOSURE OR USE IS PROHIBITED WITHOUT WRITTEN CONSENT OF TRYLON MANUFACTURING COMPANY LTD.

TRYLON TSF

CUSTOMER:	SITE:	SCALE: 85.000	
DATE: 07 MAR 07	BY: MRH	CHK: CR	APP: JB
TITLE: 48' T700 TITAN TOWER		DRAWING NO. 000001.610.0084	

\\ENG-SERVER\amerdian\VAULT_D-DRAWINGS\000001.610\000001.610.0084-1.dwg, 5/1/2007 4:32:40 PM, MARCUSH

48' T800 TITAN TOWER

(P/N 4.95.0805.000)

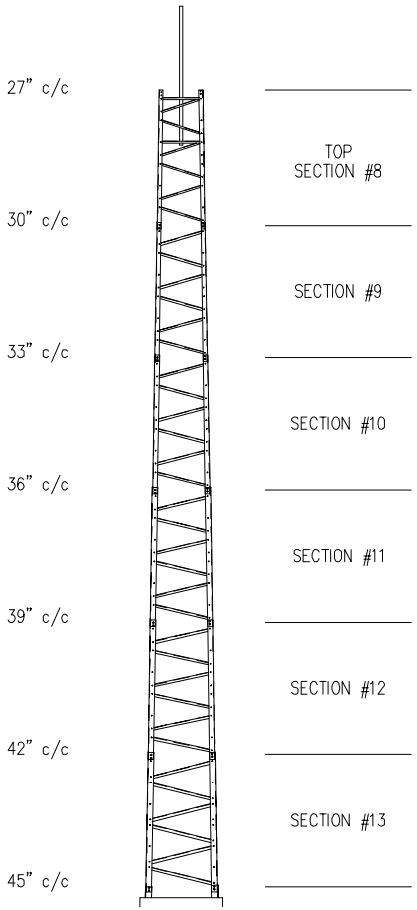

MAXIMUM ALLOWABLE ANTENNA AREA		
SURVIVAL DESIGN NO ICE (ROUND/FLAT)		
70mph WIND	85mph WIND	100mph WIND
126/84 (sqft)	72/48 (sqft)	40/27 (sqft)

SECTION SPLICE

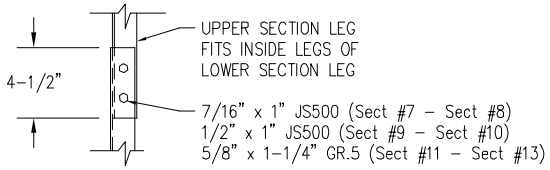

TOP ELEVATION

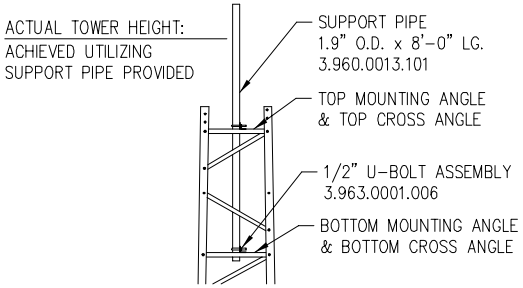

FOUNDATION DESIGN (NORMAL DRY SOIL)

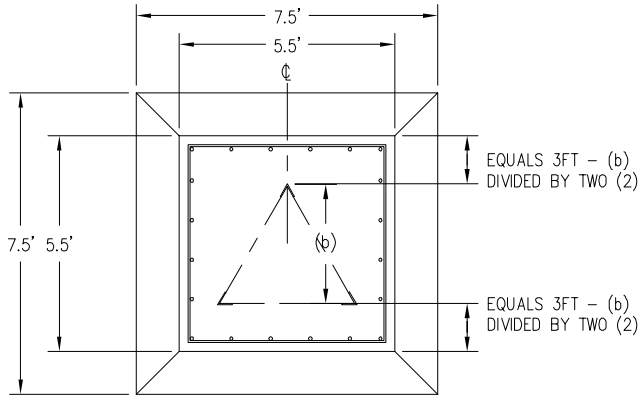

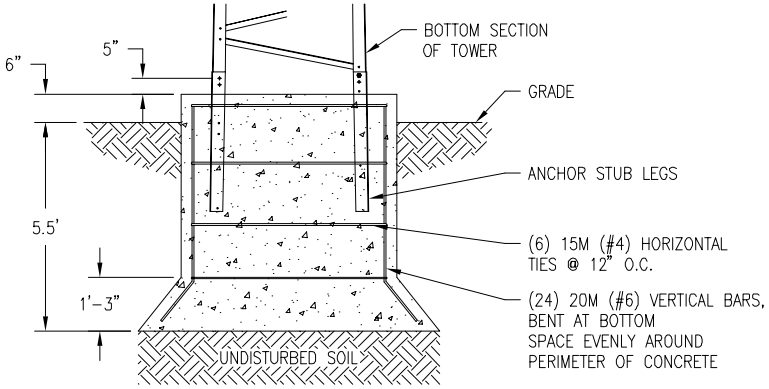

FOUNDATION LOADS:
MAX. OVERTURNING MOMENT (K*FT) = 105.00
MAX. SHEAR (kips) = 3.0
DESIGN UPLIFT PER INDIVIDUAL LEG (kips) = 32.0

CONCRETE VOLUME:
7.0 CUBIC YARDS

NOTES:
1) PRE-ASSEMBLED PART NUMBER 4.95.0805.000.
2) MAX. ANTENNA LOADS ARE CENTRALLY LOCATED AND BALANCED, 3FT OR LESS ABOVE THE TOWER TOP.
3) "SURVIVAL" DESIGN IN NOT THE SAME AS EIA-222. FOR EIA COMPLIANCE SEE OUR SUPERTITAN MODELS.
4) MINIMUM 32ksi YIELD FOR ALL COMPONENTS.
5) CONSTRUCTED FROM PASSIVATED G-90 COAT GALVANIZED STEEL SHEET.
6) TOWERS COME ASSEMBLED IN 8FT SECTIONS.
7) TOP SUPPORT PIPE IS INCLUDED.
8) FOR OPTIONAL ROCK BOLT FOUNDATION SEE DWG 000001.610.0033 AND 000001.610.0021.

REV.	REV. BY:	CHK. BY:	DESCRIPTION	DATE
A	MRH	CR	ISSUED FOR DISTRIBUTION	5 APR 07

CONFIDENTIAL: ALL INTELLECTUAL PROPERTY RIGHTS HEREIN ARE THE PROPERTY OF TRYLON MANUFACTURING COMPANY LTD. ALL DUPLICATION, RECORDING, DISCLOSURE OR USE IS PROHIBITED WITHOUT WRITTEN CONSENT OF TRYLON MANUFACTURING COMPANY LTD.

TRYLON TSF

CUSTOMER:	SITE:	SCALE: 85.000	
DATE: 07 MAR 07	BY: MRH	CHK: CR	APP: JB
TITLE: 48' T800 TITAN TOWER		DRAWING NO. 000001.610.0085	

\\ENG-SERVER\amerdian\VAULT_D-DRAWINGS\000001.610\0085-1.DWG, 5/1/2007 4:33:37 PM, MARCUSH